HL9000/HL9000XL HYDRAULIC BOAT LIFT INSTRUCTIONS

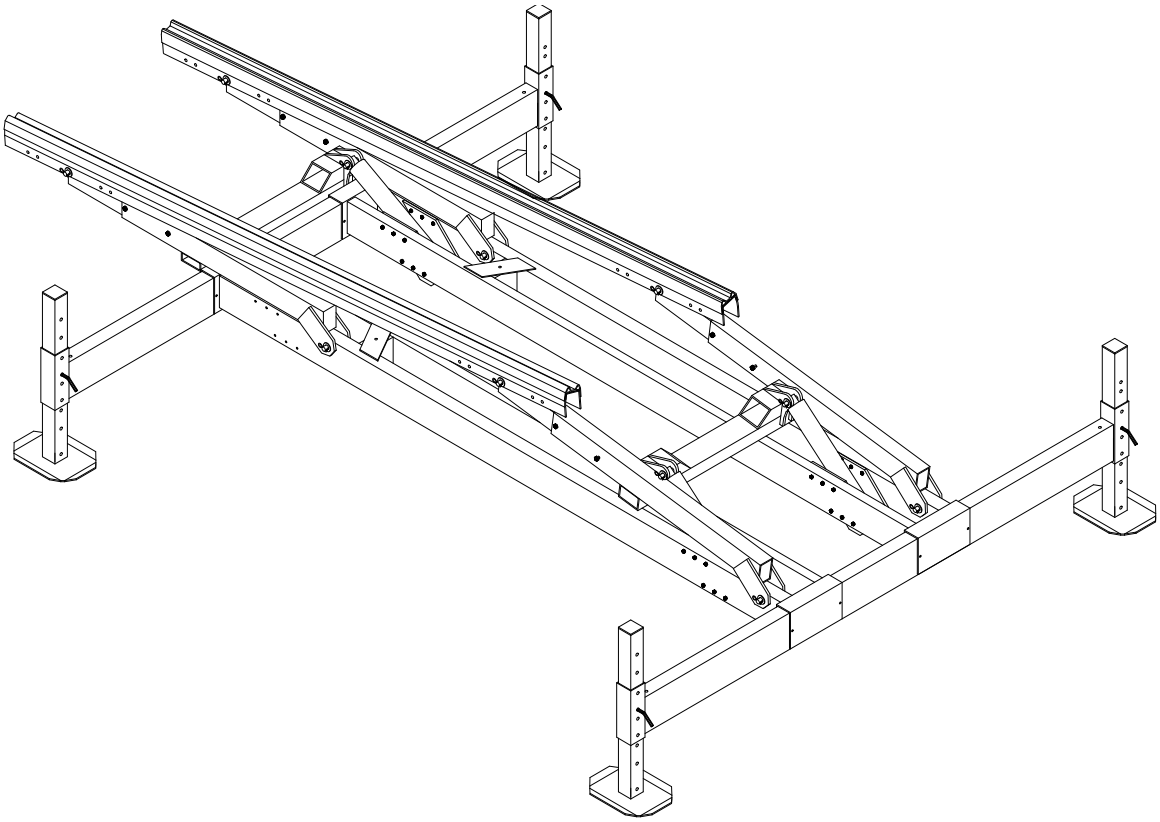

REIMANN & GEORGER CORPORATION
MARINE PRODUCTS **BUFFALO, NY**
P/N 6114164 **12/03/10**

PRE-LIFTING CHECKLIST

The lift and related equipment must be thoroughly inspected prior to each use. Only those who have read and understood this entire manual and related equipment manuals are qualified to do this inspection. This checklist is to be used as a guideline in conjunction with the maintenance and inspection procedures outlined in this manual. It is recommended that the inspection be maintained as a permanent record.

- [ ] Ensure the lift installation will clear all power lines and obstructions above and below the water line.
- [ ] Ensure all structural members of the lift are free of defects and damage that may affect the integrity.
- [ ] Ensure the frame and platform fastenings are tight.
- [ ] Ensure the leg pins connect the bottom frame assembly to the adjustable legs. Insure the leg height has been properly adjusted for the lowest platform position relative to the water.
- [ ] Ensure the frame is square and the lift is sitting level.
- [ ] Ensure hydraulic hoses are properly connected and in good condition.
- [ ] Check the battery fluid levels, age, and time of last booster charge. The battery must be booster charged at the beginning and end of the season using a 10A charger.
- [ ] Verify battery cable is clean and tight on battery terminal.
- [ ] Verify that the polarity (positive or negative) of the solar panel matches the battery's polarity.
- [ ] Verify solar panel or AC charger is plugged in correctly.
- [ ] Verify that the solar panel is getting an adequate amount of sunlight.
- [ ] Check the voltage output of the solar panel.
- [ ] Ensure that any user or dealer installed locking devices have been removed before operating the lift.
- [ ] Ensure that no auxiliary equipment such as boating hardware is being hung on the lift.
- [ ] Ensure the lift is not being used beyond its rated capacity.
- [ ] Ensure the boat is properly positioned and secured on the lift before doing any raising or lowering.
- [ ] Ensure any drain plug is in place on the boat before launching.
- [ ] Operate the lift first without, and then with, your boat on the platform to test the operation of both the lift and the power supply.
- [ ] When using a remote transmitter, ensure you have a clear visual path for safety and optimum operation.

TABLE OF CONTENTS

CHAPTER	TITLE	PAGE
1	**SAFETY**	**1**
1.1	Introduction	1
1.2	Safety Definitions	1
1.3	Equipment Safety Labels	1
1.4	Equipment And Personnel Safety	1
1.5	Installation Safety	2
1.6	Operating Safety	2
2	**SPECIFICATIONS**	**3**
2.1	Technical Data	3
2.2	Nameplate and Serial Number Tag	3
2.3	Optional Equipment	4
3	**INSTALLATION AND SETUP**	**5**
3.1	Pre-Installation Checks	5
3.2	Prior To Setup	5
3.3	Leg Pocket Assembly	6
3.4	Cylinder Support Assembly	7
3.5	Lifting Arm Installation	8
3.6	Hose/Cylinder Assembly Installation	9
3.7	Main Frame and Leg Assembly	10
3.8	Aluminum Bunk Assembly	10
3.9	Making Power Connections	11
3.10	Operating Position	12
4	**OPERATION**	**13**
4.1	Before Operating The Lift	13
4.2	Testing Lift Operation	13
4.3	Testing Lift Operation With Remotes	14
4.4	Raising and Lowering the Boat	14
4.5	Securing Lift When Not In Use	14
5	**INSPECTION AND MAINTENANCE**	**15**
5.1	General Maintenance Rules	15
5.2	Battery Maintenance	15
5.3	Remote Control Information	16
5.4	Annual Inspection	17
5.5	Storage Procedure	17
5.6	Hydraulic System Flush	18
6	**TROUBLESHOOTING**	**19**
7	**PARTS LISTS**	**21**
7.1	HL9K Hydraulic Boat Lift	21
7.2	HL9KXL Hydraulic Boat Lift	21
7.3	HL9K Bundle 1 of 2 (48”)	21
7.4	HL9KXL Bundle 1 of 2 (60”)	21
7.5	HL9K Common Bundle #2	21
7.6	HL Extension Legs	21
7.7	HL Aluminum Bunk Bundle	22
7.8	HL9K Hydraulic Cylinders & Fittings	22
7.9	HL9K Hardware Carton of Parts	22

LIST OF FIGURES

FIGURE	DESCRIPTION	PAGE
2-1	Typical Product Nameplate	3
3-1	Extension Leg and Leg Frame Assembly	6
3-2	Main Frame, Cylinder Support Assembly	7
3-3	Lift Arm Assembly	8
3-4	Cylinder, Main Frame, & Leg Assembly	9
3-5	Bunk Assembly	10
7-1	Hydraulic Cylinder and Hose Assembly	23
7-2	Complete Hydraulic Lift Assembly	24

1 SAFETY

1.1 INTRODUCTION

Your Reimann & Georger Corporation Marine Products Hydraulic Lift has been engineered to provide lifting performance, long term economics and safety advantages that no other type can match. However, even a well-designed and well-built lift can malfunction or become hazardous in the hands of an inexperienced and/or untrained user. Therefore, read this manual, and related equipment manuals thoroughly before operating your lift to provide maximum safety for all operating personnel, and to get the maximum benefit from your equipment.

WARNING:
DO NOT OPERATE THIS LIFT WITHOUT STUDYING THIS ENTIRE MANUAL. FAILURE TO DO THIS CAN LEAD TO EQUIPMENT MISUSE WITH RESULTING SERIOUS PERSONAL INJURY AND/OR DAMAGE. CONTACT YOUR RGC® MARINE DEALER IF YOU HAVE ANY QUESTIONS.

1.2 SAFETY DEFINITIONS

A safety message alerts you to potential hazards that could hurt you or others or cause property damage. The safety messages or signal words for product safety signs are **DANGER**, **WARNING**, and **CAUTION**. Each safety message is preceded by a safety alert symbol and is defined as follows:

DANGER: Indicates an imminently hazardous situation that, if not avoided, **will** cause death or serious injury. This safety message is limited to the most extreme situations.

WARNING: Indicates a potentially hazardous situation which, if not avoided, **could** result in death or serious injury.

CAUTION: Indicates a potentially hazardous situation which, if not avoided, **may** result in minor or moderate injury. It may also be used to alert against unsafe practices and property-damage-only accidents.

1.3 EQUIPMENT SAFETY LABELS

These labels warn you of potential hazards that could cause injury. Read them carefully. If a label comes off or becomes illegible, contact a Reimann & Georger Corporation dealer for a free replacement.

1.4 EQUIPMENT AND PERSONNEL SAFETY

1. Do not use the lift, control box, or the remote control if any item shows any signs of damage.
2. Do not expose the internal control box components or remote control to water or inclement weather conditions.
3. Understand the use of all controls and connections provided with the control box.
4. Never operate the lift with a substitute hydraulic power supply. Use only the control box provided with the lift.
5. Do not store any articles in the control box, as this can damage the pump or electrical system.
6. Do not allow persons other than authorized service personnel to repair any part of this equipment.
7. Do not exceed the rated maximum lifting capacity of this equipment.
8. Never try lifting anything other than a boat with this equipment.
9. Never allow people in the boat any time it is suspended above the water on the platform or when the lift is in use.
10. Do not stand or walk on the loading platform while it is in any raised position.
11. Do not allow anyone to swim or play under, near or on the lift at any time. Raise the bunks out of the water when leaving the lift unattended to allow swimmers to see its location.

12. Never use the lift to hang or store any auxiliary equipment such as boating hardware.

13. Never operate the lift during an electrical storm.

1.5 INSTALLATION SAFETY

1. Do not weld or otherwise modify the lift. Such alterations may weaken the structural integrity of the lift and void the warranty.

2. All lifting accessories such as pontoon brackets, pivoting bunks, and guide-ons, must be commercially manufactured, and be properly maintained and installed.

3. Ensure that the frame is level and square.

4. The following precautions must be observed when lifting any part of this equipment:

    a. Be sure of your footing.

    b. Bend your knees and lift with your legs.

    c. Hold the equipment section close to your body when lifting.

1.6 OPERATING SAFETY

1. Before allowing anyone to operate the lift, be certain they fully understand the proper operating procedure.

2. Completely remove any user or dealer installed locking devices before operating the lift.

3. Follow the Pre-Lifting Checklist before operating.

4. Ensure the center of gravity of the boat is between forward load tube and rear foot plates.

5. Do not try lifting or launching your boat in rough water conditions. This can damage your boat and/or the lift.

6. The boat must be stored with the lift in the over center position.

7. A clear visual path is required when using a remote transmitter. Obstacles, radio frequency interference, and weak transmitter batteries will degrade the performance and range of your remote transmitter.

8. Keep people and pets clear during operation of the lift.

9. Keep all clothing and all body parts clear of moving parts.

10. Never adjust or service the lift during operation or while connected to the control box.

11. Do not adjust the components in the control box while operating the lift.

12. Completely lower the platform before performing any type of maintenance or repair.

13. Never allow anybody to work in or on the boat when it is suspended above the water on the lift.

14. At end of operation, secure the control box and the lift to prevent unauthorized use. Never assume you will find the equipment in the same condition in which you left it.

15. Never operate the remote control or hydraulic power unit when connecting or disconnecting hydraulic hoses.

16. Do not operate the lift when under the influence of drugs, alcohol, or medication.

2 SPECIFICATIONS

2.1 TECHNICAL DATA

Model	**HL90120**	**HL90120XL**
Weight Capacity	9000 lbs.	9000 lbs.
Maximum Beam	120”	120”
Lifting Height	48”	60”
Min. Water Depth	29-3/4”	30-1/4”
Overall Width (Including Feet)	130”	130”
Overall Length (Including Feet)	197”	208”
12’ Full Length Bunks	Std.	Std.
Stainless Steel Hardware	Std.	Std.
Adjustable Legs	Opt.	Opt.
Hydraulic cylinders	2	2
Lifting Speed at full load	110 seconds up, 75 seconds down	110 seconds up, 75 seconds down
Battery Powered Control Box with Remote Control Hydraulic Power Unit	Std.	Std.
AC Charger for Control Box	Opt.	Opt.
Solar Panel for Control Box	Opt.	Opt.

2.2 NAMEPLATE AND SERIAL NUMBER TAG

It is important to identify your lift completely and accurately whenever ordering spare parts or requesting assistance in service. There are two product nameplates for each lift; one nameplate located at the top of the Right-Hand Forward Lift Arm and another nameplate in the control box. Each label shows the model and serial numbers and capacity rating. The lift label should appear as the sample nameplate shown in Figure 2-1. Record lift information from both nameplates below for future reference.

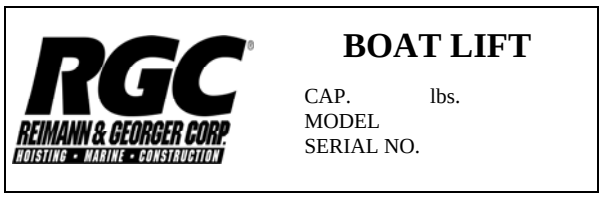

Figure 2-1.
Typical Product Nameplate

HYDRAULIC LIFT NAMEPLATE INFORMATION
MODEL _____
SERIAL NUMBER _____
CAPACITY RATING _____

CONTROL BOX NAMEPLATE INFORMATION
MODEL _____
SERIAL NUMBER _____
CAPACITY RATING _____

2.3 OPTIONAL EQUIPMENT

The following options are available which enable you to customize your lift for your particular operation. Installation instructions are provided as part of each option kit.

1. **Canopies**— Boats tucked neatly under the heavy duty canopy are protected from the elements, reducing the need for boat coverings. Various canopy sizes and colors are available.

2. **Full Length Guide On**—Aluminum with cushioned wood guide ons make entering the lift easy in various water conditions.

3. **Underwater Lights**—Remote controlled waterproof lights that can be mounted to the lift frame and control box lighting for greater nighttime visibility.

4. **Motor Stop**—Assists in positioning boat on the lift for balanced lifting.

5. **Extension Legs**—Adjustable legs available in pairs with bracing. Standard lengths are 3’, 5’, 7’, 9’.

6. **Control Box Shelf**—Provides a convenient and safe storage place for the power supply.

7. **Hose Extensions**—Enable operation of the power supply when at an extended distance from the lift.

8. **AC Charger**—Provides an additional method of recharging 12 volt DC battery. Compensating for either high usage of boat lift, or insufficient solar energy to recharge battery completely.

9. **Solar Panel—**Provides an additional method of recharging 12 volt DC battery. Compensating for either high usage of boat lift, or lack of an electric power source to recharge battery completely.

10. **Wheel Kit**—Enables boat lift to be rolled in and out of the water for off-season storage on dry land.

3 INSTALLATION AND SETUP

3.1 PRE-INSTALLATION CHECKS

1. Do not assemble the lift if any part shows any sign of damage.

2. Do not weld or otherwise modify the lift. Such alterations may weaken the structural integrity of the lift and void the warranty.

3. All lifting accessories such as pontoon brackets, pivoting bunks, and guide-ons shall be commercially manufactured, and be properly maintained and installed. Consult the manufacturer's separate instructions provided for these accessories.

3.2 PRIOR TO SETUP

1. The assembly instructions refer to the placement of components in terms of forward, rear, right-hand and left-hand. The rear of the lift corresponds to the rear of the boat. The rear is also the lowest end of the bunks allowing easier positioning of boat.

2. In choosing a place to assemble the lift, keep in mind the final placement of the lift. The lift may be placed on either side of your dock and the boat must enter the rear of the lift.

3. This product has been supplied with stainless steel hardware to protect against a harsh marine environment and provide outstanding performance. Due to the chemistry and surface condition of stainless steel, there is a natural tendency for the hardware to "gall, lock up, or seize" during assembly. To prevent this from occurring, it is **highly recommended** that the anti-seize supplied in the hardware bag be applied to the mating surfaces of all stainless steel fasteners before assembly. Lubricants containing molybdenum disulfide, graphite, mica or talc may also be used.

CAUTION:
DO NOT EXCEED THE MAXIMUM TORQUE RATING ON ALL BOLTS OF 20 FT-LBS.

WARNING:
FAILURE TO APPLY A SUITABLE LUBRICANT TO THE MATING SURFACES OF STAINLESS STEEL THREADED FASTENERS MAY CAUSE GALLING AND/OR SEIZING OF ASSEMBLY.

3.3 LEG POCKET ASSEMBLY

1. **Refer to Figure 3-1.** Fasten foot plate (1) to extension leg (2) using hardware (C) and (D).

2. Insert foot plate and extension leg assembly into leg assembly (3). Insert leg pin and clip (A) to secure.

3. Install the four plastic cap plugs (Z) onto ends of the extension legs.

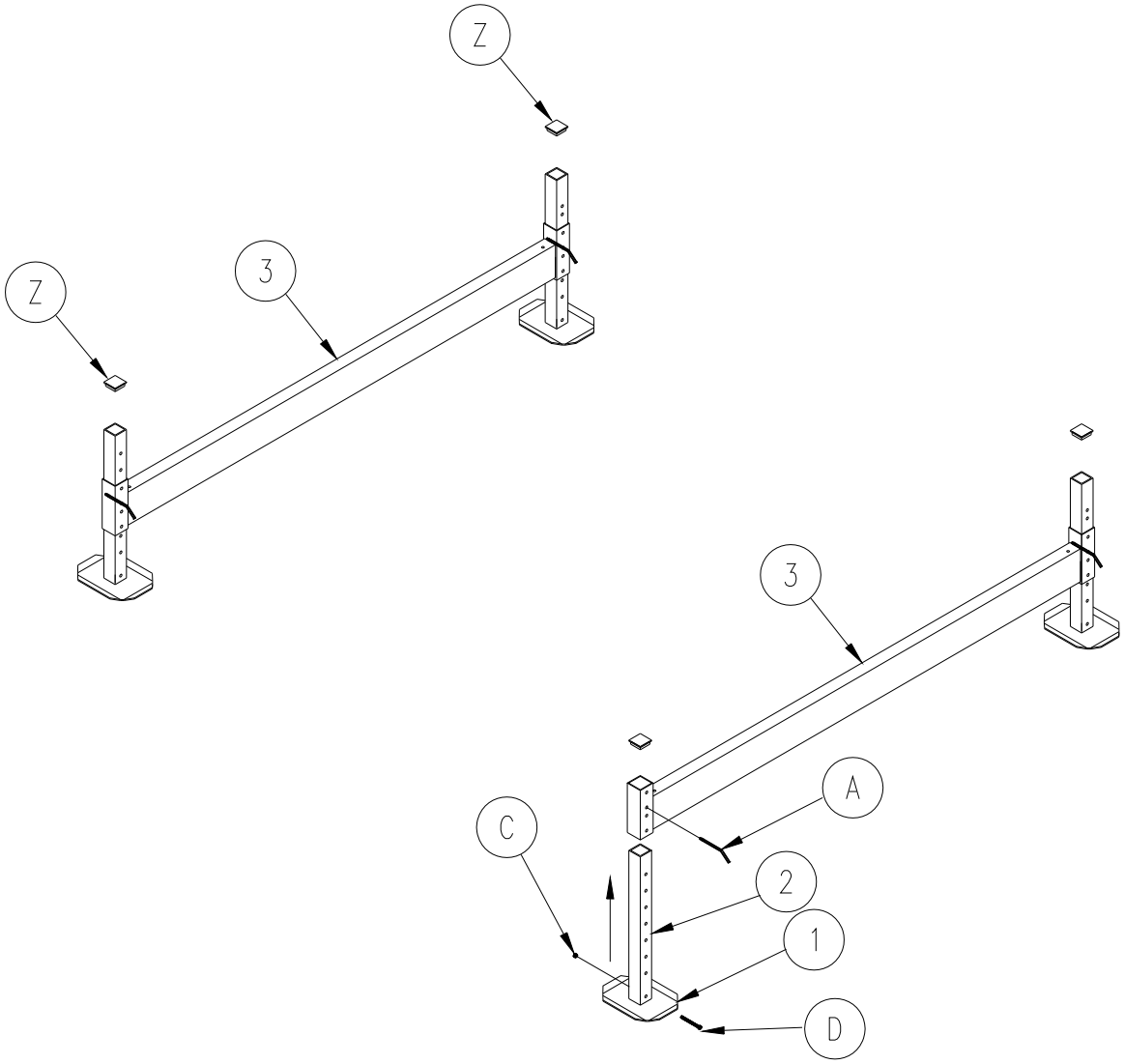

Figure 3-1.
Extension Leg and Leg Frame Assembly

3.4 CYLINDER SUPPORT INSTALLATION

1. **Refer to Figure 3-2.** Install the left (6) and right (7) cylinder support plates onto both ends of the right hand main frame (5). Install cylinder support plates so that the welded bosses on the support plates are facing each other.

2. Secure the cylinder support plates with hardware E, F, G, H, & I. Use fastener (E) in the 3” wide frame tube. Use fastener (I) in the 2” wide tube frame. Install bolts so that the nuts are on the outside of frame.

3. Repeat steps 1 and 2 above to assemble left hand main frame (4).

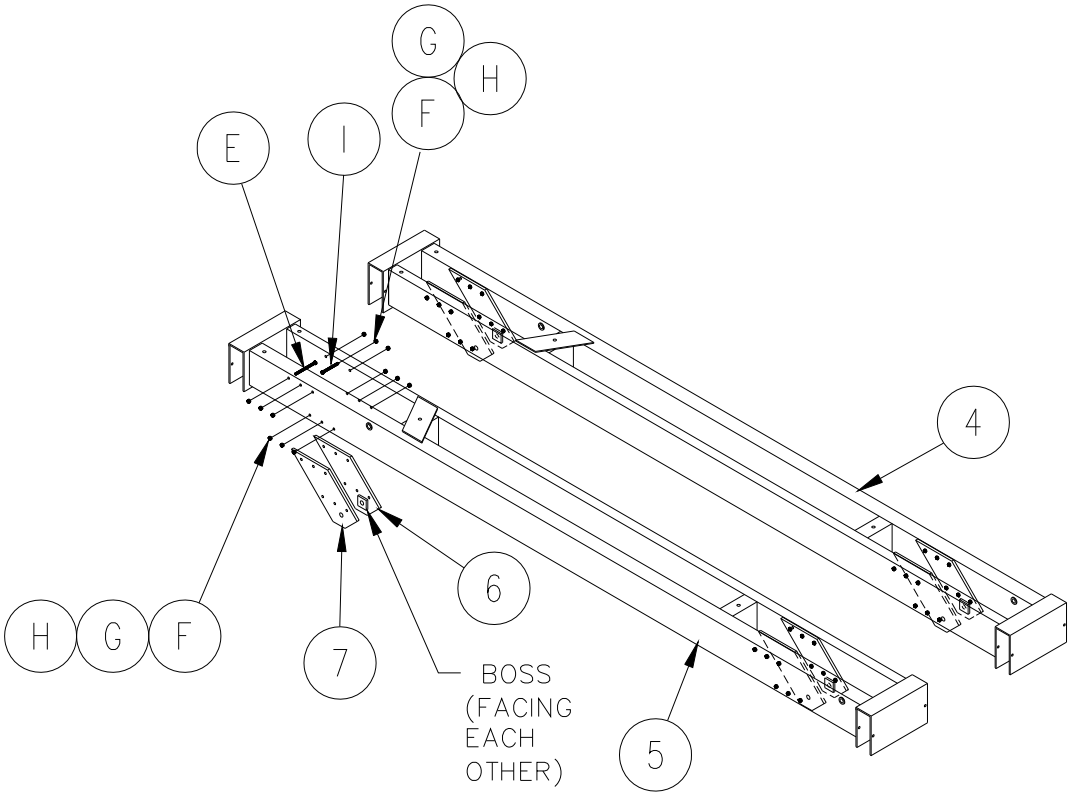

Figure 3-2.
Main Frame and Cylinder Support Assembly

3.5 LIFT ARM INSTALLATION

PLEASE NOTE: You must identify the rear and front lift arm assemblies before installing. The rear and front lift arms look similar on the HL9K lift. Measure the length of the lift arm, the rear lift arm is 51-3/8 lg, the front lift arm is 53-3/8 lg. The rear lift arm (detail 8) is 2” shorter than the front lift arm (detail 9). The front lift arm can also be identified by the serial number tag and the decal “9000 LBS CAP” is on the lift arm.

1. **Refer to Figure 3-3.** Install rear lift arm (8) to the main frame. Before inserting clevis pin (B), install nylon washer (J) between the main frame and the lift arm pivot plates. Insert clevis pin (B) through the lift arm end plates and hole in the lift frame. Install flat washer (Q) and cotter pin (P) on each end of clevis pin. Secure clevis pin by spreading end of cotter pin apart and bending around clevis pin.

2. Install front lift arm (9) to the main frame. Before inserting clevis pin (B), install nylon washer (J) between the main frame and the lift arm pivot plates. Insert clevis pin (B) through the lift arm end plates and hole in the lift frame. Install flat washer (Q) and cotter pin (P) on each end of clevis pin. Secure clevis pin by spreading end of cotter pin apart and bending around clevis pin.

3. Install lift arm extension tubes (10) to the front (9) and rear (8) lift arms. Use hardware (C) & (D) to secure the arm extensions to the lift arm.

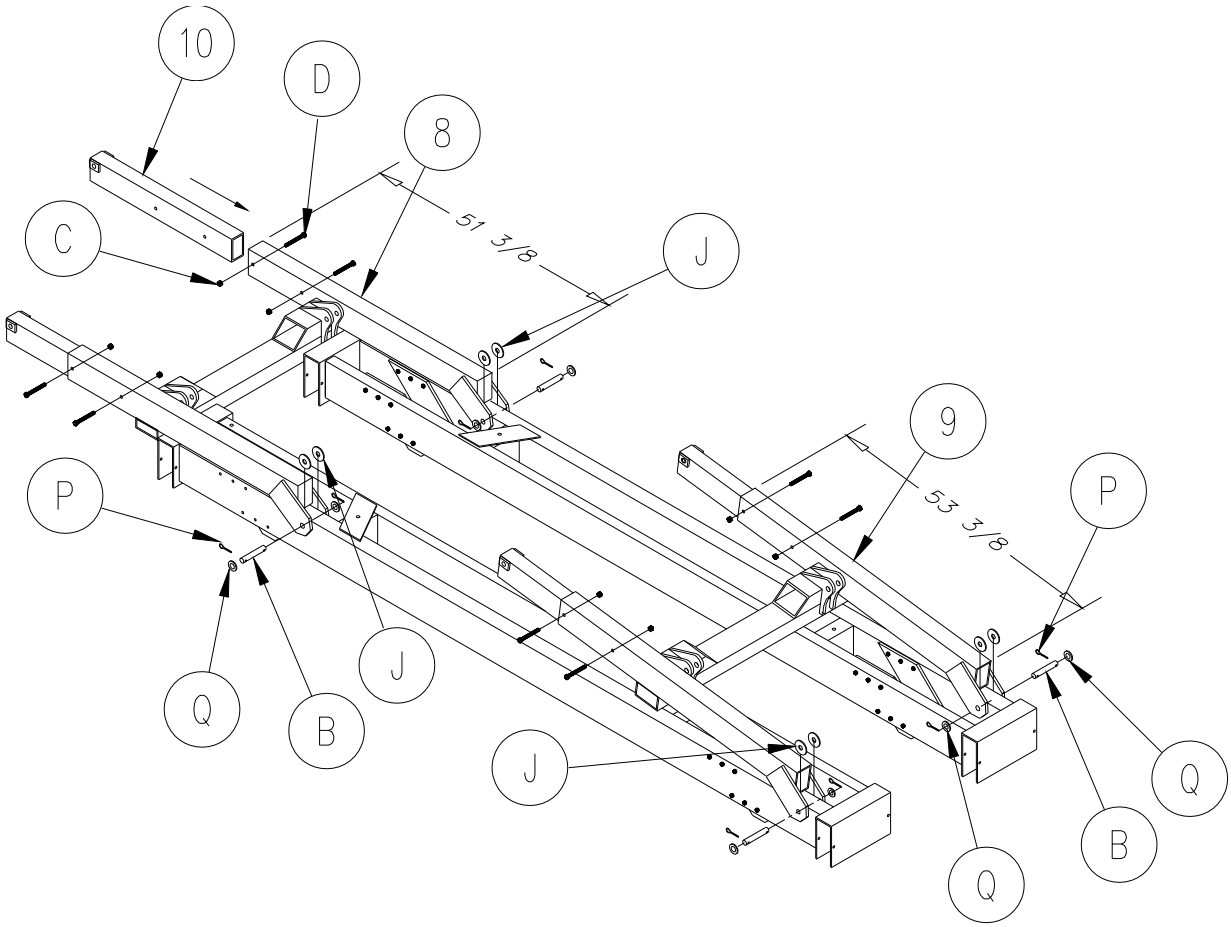

Figure 3-3.
Lift Arm Assembly

3.6 HOSE / CYLINDER ASSEMBLY INSTALLATION

1. **Refer to Figure 3-4.** Install the hydraulic cylinders (11) onto the main frame. Place the cylinders in position so that the hydraulic fittings are facing upward. Place the cylinders in position and insert pin (L) through only one cylinder support plate. Install flat washer (Q) between the cylinder and the cylinder support plate. Insert clevis pin through the cylinder body. Insert another flat washer (Q) between the cylinder and the other support plate.

WARNING:

HYDRAULIC CYLINDER HOSE FITTINGS MUST FACE UPWARDS TO AVOID DAMAGING THE FITTINGS OR HOSES IF THEY CONTACT THE GROUND DURING OPERATION. DAMAGE TO BOAT OR LIFT FROM SUDDEN LOSS OF HYDRAULIC FLUID COULD RESULT.

2. Install flat washer (Q) and cotter pin (P) on each end of the clevis pin (L). Secure clevis pin by spreading end of cotter pin apart and bending around clevis pin.

3. Attach rod end of the cylinder to the lift arm. Place the cylinder rod in position and insert clevis pin (M) through the upper cylinder pivot rod plates and cylinder rod.

4. Install flat washer (Q) and cotter pin (P) on each end of clevis pin (M). Secure clevis pin by spreading end of cotter pin apart and bending around clevis pin.

5. Wipe the mating surfaces of the couplings with a clean rag prior to connecting the hose couplings together. Keep them connected until ready to be connected to the control box.

6. Ensure the hoses are routed under the side frame and away from any pinch point. Ensure that the hoses are not bent at a sharp angle. Use UV stabilized nylon cable ties, (black zip ties) to attach the hoses to the lift frame. If the optional light bar will be used, only attach hoses loosely at this time.

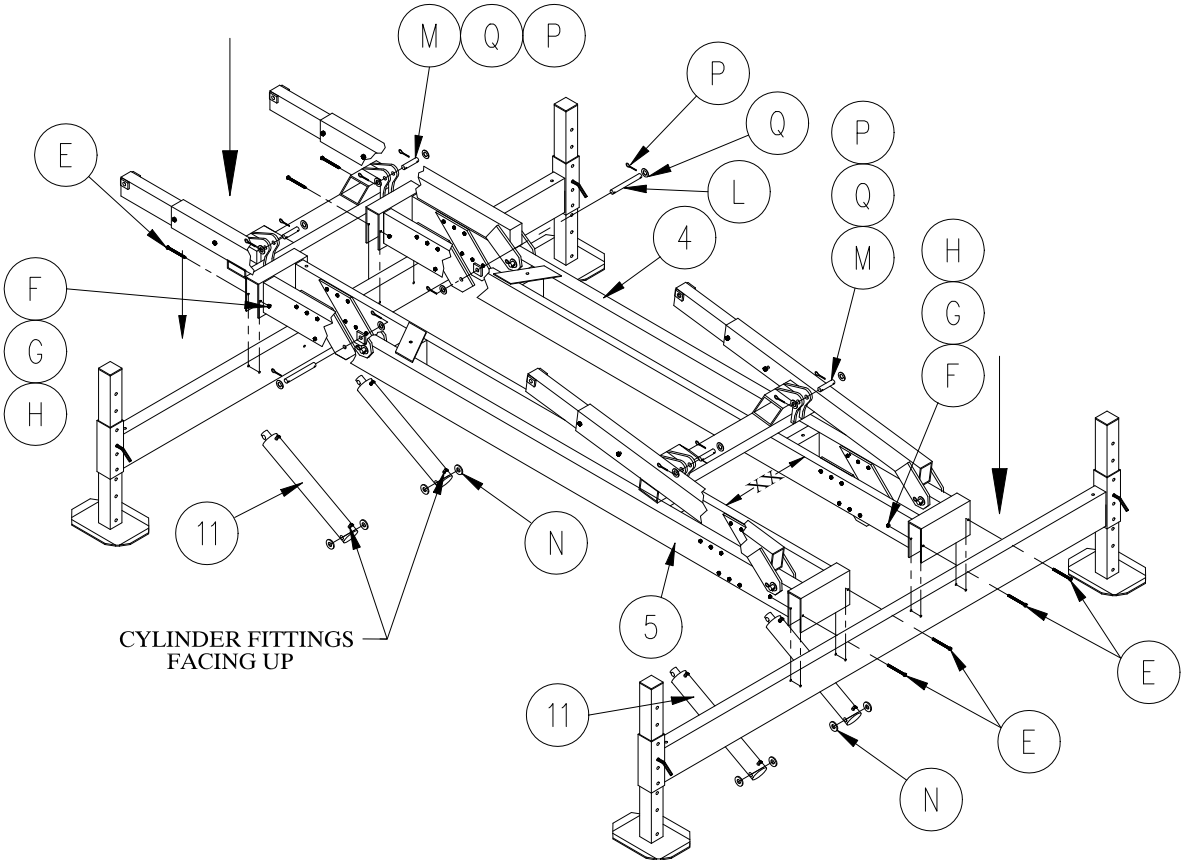

Figure 3-4.
Cylinder, Main Frame and Leg Assembly
(Figure shown without hoses for clarity)

3.7 MAIN FRAME AND LEG ASSEMBLY

1. **Refer to Figure 3-4.** Install left side main frame (4) and right side main frame (5) onto each leg assembly. Set left and right frames to a dimension of 37-1/2” inside frame as shown (XX) on figure 3-4.

2. Secure the left and right side frames to the leg assemblies using hardware E, F, G, & H.

3.8 ALUMINIM BUNK ASSEMBLY

WARNING:
DO NOT ALLOW ANYONE TO OPERATE THE POWER SUPPLY WHILE INSTALLING THE BUNKS. THIS CAN CAUSE PERSONAL INJURY AND/OR EQUIPMENT DAMAGE.

1. **Refer to Figure 3-5.** Install aluminum bunk (12) to the lift arms. Place the bunk so that the sloped top surface is toward the inside of the lift.

2. Insert clevis pin (K) through one side of the aluminum bunk. Insert nylon washer (O) between bunk and the lift arm. Finish inserting clevis pin through the lift arm. Insert another nylon washer (O) between the bunk and other side of lift arm before fully inserting clevis pin. Repeat for other end of bunk.

3. Install flat washer (R) and cotter pin (P) on each end of clevis pin (K). Secure clevis pin by spreading end of cotter pin apart and bending around clevis pin. Repeat for other end of bunk.

4. Repeat steps 1 thru 3 to assemble other bunk.

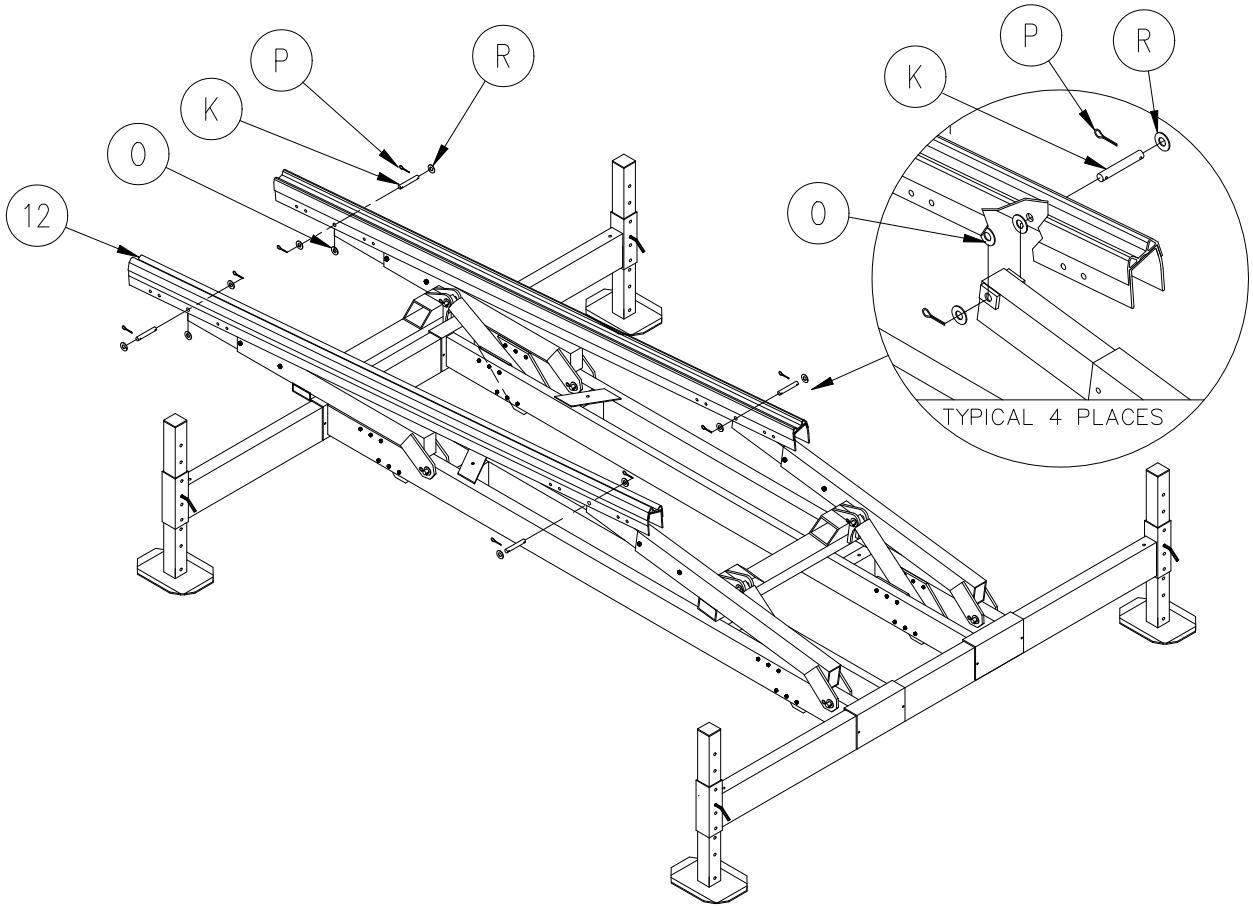

Figure 3-5.
Bunk Assembly

3.9 MAKING POWER CONNECTIONS

1. Before making any hydraulic connections, inspect all hydraulic lines, fittings and hoses for leaks and risks of rupture as follows:

   a. Inspect each hydraulic line, fitting, and hose for breaks, cracks, worn spots, bulges, chemical attack, kinks or any other damage. Never try to stop any detected leak with any body parts. Do not put your face close to suspected leaks. Hold a piece of cardboard close to suspected leaks and then inspect the cardboard for signs of hydraulic oil.

   b. Replace a damaged line, fitting or hose immediately. Never repair the part.

WARNING:
LIQUID UNDER HIGH PRESSURE CAN PIERCE THE SKIN, CAUSING DEATH OR SERIOUS INJURY. IN CASE OF INJURY, GET IMMEDIATE MEDICAL ATTENTION.

3. Wipe the mating surfaces of the hose couplings as well as the control box couplings with a clean rag prior to making connection.

4. Insert the hoses through the flexible cable boot in the back of the control box. Connect the hose couplings.

5. If the quick connect fittings are difficult to attach, relieve some of the pressure in the system by pushing in on the tip of the male hose connector. Pressing the tip against a clean hard surface is suggested. Use caution not to damage the fitting. This will release a small amount of fluid, which is acceptable. Once the pressure has been released, you should be able to connect both hoses.

WARNING:
ENSURE HYDRAULIC HOSES ARE PROPERLY CONNECTED AND IN GOOD CONDITION.

6. Ensure that the hydraulic fluid supply is adequate.

7. Attach the red battery lead to the positive battery terminal, and the black lead to the negative terminal. Tighten each wing nut with a pair of pliers, as even a slightly loose connection can cause the battery terminals to heat up. Keep battery terminals clean with a corrosion protective coating.

WARNING:
FOLLOW THE SAME SAFETY RULES WHEN WORKING INSIDE THE POWER SUPPLY BOX AND AROUND THE BATTERY THAT APPLY TO ANY CAR OR BOAT BATTERY. A BATTERY CAN EXPLODE AND CAUSE PERSONAL INJURY AND/OR EQUIPMENT DAMAGE.

8. Verify that the system is switched “on” using the on/off switch located inside the power supply box on the side of the electrical control box.

9. If the optional solar panel is supplied, the solar panel must be mounted in a suitable location. Mount the solar panel so that it faces toward the south and angled toward the afternoon sun. Route the plug end of the solar panel through the flexible cable boot in the back of the control box. If the solar panel is supplied with a 2-pole plug, connect to the mating connector in the wiring harness. If the solar panel has ring terminals on the ends of the wire, connect the solar panel black wire to the negative battery terminal, connect the solar panel white wire with a diode to the positive battery terminal.

10. If the optional AC charger is supplied, mount the charger to left side of the box. Connect the red wire to the positive battery terminal. Connect the black wire to the battery negative terminal. Run the AC power cord through the flexible cable boot in the back of the control box and plug the AC charger in.

11. If the optional light bar will be used on the lift, route the light bar wire through the flexible cable boot in the back of the control box and plug into the light connector. Using UV stabilized nylon cable ties, (black zip ties) attach the wire and the hydraulic hoses to the lift frame.

3.10 OPERATING POSITION

After moving your lift to the operating position, ensure that the bottom lift frame assembly is square and sets level. Measure diagonally the inside edge of rear extension leg to inside edge of opposing front extension leg. Repeat for alternate corners. Lift is considered square when the **difference between the two measurements shall not exceed 1/4 of an inch**.

CAUTION:

SEVERE OUT OF LEVEL INSTALLATION MAY CAUSE BINDING, RESULTING IN EQUIPMENT DAMAGE.

Frame Diagonal Measurement Diagram
(Measure to Inside Corners)

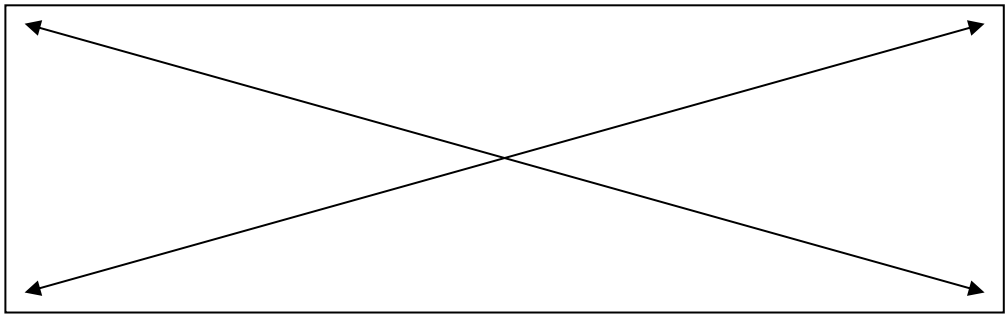

4 OPERATION

4.1 BEFORE OPERATING THE LIFT

1. Review and follow all the safety precautions given in Chapter 1.

2. Do not use the lift if it shows any signs of damage.

3. Ensure that all bolts and nuts are fastened securely prior to operation.

4. Ensure that the frame is square and that the lift sits level. (see Sec. 3.11)

WARNING:
IF THE FRAME IS NOT SQUARE OR THE LIFT IS NOT LEVEL, BINDING MAY RESULT. THIS CAN CAUSE PERSONAL INJURY AND/OR EQUIPMENT DAMAGE.

5. Never try lifting anything other than a boat with this lift.

WARNING:
NEVER TRY TO USE THIS EQUIPMENT BEYOND ITS RATED CAPACITY. THIS CAN DAMAGE THE LIFT AND/OR BOAT RESULTING IN PERSONAL INJURY.

THE BOAT MUST BE PROPERLY POSITIONED ON THE LIFT BEFORE DOING ANY RAISING OR LOWERING. FAILURE TO DO THIS CAN CAUSE PERSONAL INJURY AND/OR EQUIPMENT DAMAGE.

6. Never try to lift or launch your boat in rough water conditions. This can damage your boat and/or the lift.

7. Follow the Pre-Lifting Checklist before operating.

8. Read and know the instructions and ensure that everyone understands the proper operating procedure.

9. Understand the use of all the controls and connections provided with the power supply and the remote transmitter.

4.2 TESTING LIFT OPERATION

After the lift installation is complete, it is important to test it for proper functioning before any load is applied. Proceed as follows:

1. Use the up/down switch inside the control box to cycle the lift up and down. Ensure that the hydraulic hoses are not binding or being pinched by any part of the lift.

WARNING:
DO NOT STAND OR WALK ON THE LIFT PLATFORM WHILE IT IS IN ANY RAISED POSITION. THIS CAN CAUSE SERIOUS PERSONAL INJURY.

2. The loading platform should move up and down smoothly without excessive stress or squeaking. If there is excessive squeaking or binding, check that all pivot pins are properly lubricated.

3. After cycling the lift a couple of times, inspect all hardware to ensure that they are still secure and tight. Also test the remote control and underwater lighting system. Ensure the hydraulic fluid level in pump reservoir remains up to the base of filler neck.

4. Contact your authorized dealer if the hydraulic system fails to perform as described in this section. Do NOT tamper with either system.

4.3 TESTING LIFT WITH REMOTES

1. To unlock the remotes, press the two blue buttons simultaneously, this will unlock the unit.
2. Press the 'UP' button to raise the lift platform. Press the 'DOWN' button to lower the lift platform.
3. To lock the remote, press the two blue buttons simultaneously.

4.4 RAISING AND LOWERING THE BOAT

1. Position the boat so that the boat's center of gravity is between forward and rear support legs.

2. Carefully raise the platform until the bunks "capture" the boat.

WARNING:
NEVER ALLOW PEOPLE IN THE BOAT ANY TIME IT IS SUSPENDED ABOVE THE WATER ON THE LIFT.

3. Keep fingers and clothing clear of all moving parts. Keep people clear during operation of the lift.

4. Stop the lift again and check the stability of the lift. Ensure that it is remaining level and will not topple over.

5. Continue lifting the boat, closely observing the position of the lift, until the platform is in the fully upright and over center position.

6. Remove the boat from the lift and check to see that the lift is still level. If not, the legs will have to be re-adjusted.

CAUTION:
ALWAYS ADJUST THE HEIGHT OF THE LIFT TO LIMIT WAVE ACTION AGAINST THE HULL. WAVE ACTION CAN SERIOUSLY DAMAGE THE LIFT AND/OR YOUR BOAT.

7. Two weeks after installation, check to see that the lift is still level, as it may have settled over time. Readjust the legs as described above and repeat this inspection and adjustment procedure at the frequency found necessary.

8. After removing the boat from the lift, re-tighten the bunk bolts as required.

4.5 SECURING LIFT WHEN NOT IN USE

1. Make the lift visible by leaving the platform in any elevated position when it is not loaded with a boat. This prevents the lift from being a hidden underwater obstruction, and protects the bunks from prolonged water immersion.

2. Lock out your control box to prevent unauthorized use when your boat lift is unattended. Never assume you will find the lift in the same condition that you left it.

3. When storing the boat on the lift, the following additional precautions must be observed:

   a. When storing the boat, the platform must be in the upright over center gravity lock position for maximum safety. The over center position will prevent the boat from lowering if any hydraulic leak occurs.

   b. Position the boat on the platform so that the boat's center-of-gravity is between the front lift arm and the rear foot plates when in the down position.

   c. Prevent rainwater from accumulating in your boat when leaving it on the lift for long term storage. A boat that has water in it from a rainstorm could exceed the recommended weight capacity of the lift. **Just 1 gallon of water weighs over 8 pounds.** Be sure to remove the plug while the boat is up on the lift. Make sure you replace the plug prior to launching your boat.

5 INSPECTION AND MAINTENANCE

5.1 GENERAL MAINTENANCE RULES

1. Do not allow persons other than authorized service personnel to repair this equipment.

2. Completely lower the platform before performing any type of maintenance or repair.

WARNING:
NEVER ALLOW ANYBODY TO WORK IN OR ON THE BOAT WHEN IT IS SUSPENDED ABOVE THE WATER ON THE LIFT.

WARNING:
BEFORE STARTING ANY MAINTENANCE ON THE LIFT, DISCONNECT AND LOCK OUT THE POWER SUPPLY TO PREVENT ACCIDENTAL OPERATION.

3. Immediately replace any components found to be defective.

CAUTION:
POOR OR IMPROPER MAINTENANCE CAN LEAD TO EQUIPMENT DAMAGE OR FAILURE.

4. Do not weld or otherwise modify the lift. Such alterations may weaken the structural integrity of the lift and invalidate your warranty.

5.2 BATTERY MAINTENANCE

1. Use a 12-volt, group 27 marine deep-cycle battery with a minimum of 500 CCA, or with a reserve capacity of 160 amp hours or more. We recommend the following batteries: U.S. Battery Model 27 TMX, Trojan Battery Model 27 TMX or Rolls Battery Engineering Model 27112XJM. Reserve capacity is the most important feature.

2. The lift has an energy capacity of about 20 full cycles using a new battery with a reserve capacity of 160 amp hours. However, avoid dipping below 50% battery capacity because the solar panel will have trouble recovering from such a deep draw. For constant usage, we recommend usage of the optional AC charger connected to the battery on a full time basis.

3. The following table lists maximum monthly full lifting cycles (down and up), using a single solar panel, to keep the battery capacity at a steady state energy level. The capacity of the battery will allow for additional cycles for any particular month. The values assume all-day exposure with typical seasonal weather.

Month	Cloudy northern climate	Sunny southern climate
January	2 cycles	27 cycles
February	8	29
March	14	29
April	18	31
May	21	27
June	22	25
July	24	28
August	24	31
September	19	29
October	12	29
November	4	28
December	1	25

4. If the solar panel does not keep the battery charged, try any of the following:

    a. Move the solar panel to an area with less obstructed sunlight.

    b. Add a second solar panel, or add an AC charger.

    c. Booster charge the battery at mid season.

5. Check water level in battery every three months. If the water level is low, fill it up with distilled water. Booster charge the battery with a 2A charge using a 10A charger in the beginning and end of the season.

5.3 REMOTE CONTROL INFORMATION

The remote transmitter can de-program due to either a power loss (dead battery) or electrical interference, which will require re-programming of the transmitter.

Proper function of the RC system is dependent upon several factors that are not controllable by the manufacturer. RGC is not responsible for the following: Improper installation, Low battery, Natural occurrences, Use other than intended, Location of panel, receiver or transmitter too close to interfering metal objects, Multiple RC panels within 15 feet of each other, Use in area with external interference such as radio, cell phone, and TV towers or a natural magnetic field, Blocked or shielded antenna, Other transmitter interference from cell phones, cordless phones, wireless systems, CB and mobile transmitters, computer and industrial equipment, electric motors, even fluorescent lights.

Reprogramming Your Remote Control
In the event that you may need to reprogram your remote control unit, please follow these step instructions:

1. Hold down both the red button (located on the black RC box) and the “UP” button (located on the hand held remote) at the same time for five (5) seconds.

Note: If black box does not have red button on the outside use the next procedure below.

2. Release “RED” button (located on the black RC box) and continue to hold down the “UP” button (located on the hand held remote) for an additional five (5) seconds.

-OR-

1. Remove cover from black RC box. A see-through cover control unit is inside this box. Hold down “black” button (located on the side of the see-through control unit) until red light flashes once in the see-through control unit located in corner.

2. Release the “black” button then hold down the “UP” button (located on the hand held remote) for five (5) seconds.

You may have to repeat these two (2) steps more than once to reset your remote control unit.

5.4 ANNUAL INSPECTION

At least once a year, the lift must be thoroughly inspected using the following procedure.

WARNING:
DO NOT ALLOW ANYBODY TO USE THE LIFT UNTIL THIS MAINTENANCE IS COMPLETED.

1. Tighten all bolts.

2. Clean cylinder rods.

3. Check that all the pivot pins are lubricated properly.

4. Check frame thoroughly for defects.

5. Inspect all hydraulic lines, fittings and hoses for leaks and risks of rupture as follows:

   a. Inspect each hydraulic line, fitting, and hose for breaks, cracks, worn spots, bulges, chemical attack, kinks or any other damage. Never try to stop any detected leak with any body parts. Do not put your face close to suspected leaks. Hold a piece of cardboard close to suspected leaks and then inspect the cardboard for signs of hydraulic oil.

WARNING:
LIQUID UNDER HIGH PRESSURE CAN PIERCE THE SKIN, CAUSING DEATH OR SERIOUS INJURY. IN CASE OF INJURY, GET IMMEDIATE MEDICAL ATTENTION.

   b. Replace a damaged line, fitting or hose immediately. Never repair the part.

5.5 STORAGE PROCEDURE

CAUTION:
DO NOT STORE THE LIFT IN THE WATERWAY IF FREEZING TEMPERATURES ARE EXPECTED. THIS WILL CAUSE EQUIPMENT DAMAGE.

1. Wipe cylinder rods before storing hydraulic lift at the end of the season.

2. Disconnect and store battery fully charged to prevent from freezing.

3. Disconnect and store hydraulic cylinders, hydraulic hoses, and control box in a warm dry area if temperatures or wind chill factors below minus 20 degrees F are expected.

5.6 HYDRAULIC SYSTEM FLUSH

It is recommended that as part of an annual maintenance program, the hydraulic system be drained and fresh Vegetable Grade hydraulic oil installed. RGC recommends CITGO Aqua Marine Hydraulic 46 (or equivalent biodegradable oil) be used.

1. Lower the platform until the cylinders are fully retracted.

WARNING:
FOLLOW THE SAME SAFETY RULES WHEN WORKING INSIDE THE CONTROL BOX AND AROUND THE BATTERY THAT APPLY TO ANY CAR OR BOAT BATTERY. A BATTERY CAN EXPLODE AND CAUSE PERSONAL INJURY AND/OR EQUIPMENT DAMAGE.

2. Disconnect couplings between cylinder hoses and control box.

3. Unscrew reservoir oil fill cap.

4. Siphon old oil from reservoir using a hand siphon or vacuum pump. If not available, remove the 12-volt battery from control box, and very carefully tip over the control box to drain oil from reservoir into a bucket.

5. Remove reservoir from pump assembly to inspect oil filter screen. Be careful not to damage O-ring seal for reservoir. If necessary, clean the filter screen with soap and water.

6. Reassemble reservoir and pump assembly, then fill reservoir with fresh CITGO Aqua Marine Hydraulic 46.

WARNING:
LIQUID UNDER HIGH PRESSURE CAN PIERCE THE SKIN, CAUSING DEATH OR SERIOUS INJURY. IN CASE OF INJURY, GET IMMEDIATE MEDICAL ATTENTION.

7. Depressurize cylinder hoses as follows:
   a. Depressurize the cylinder hose with male coupling by wrapping a rag around the coupling (to prevent spray) and carefully pressing the end button against a hard flat surface. Use caution to avoid damaging the coupling button.

   b. Depressurize the cylinder hose with female coupling by wrapping a rag around coupling (to prevent spray) and carefully press the internal button using a 3/8” bolt. Be very careful not to damage the internal O-rings. Be sure that both couplings are kept clean at all times.

9. Clean the lower cylinder hose coupling and reconnect to the control box.

10. Connect a spare coupling or remove quick-disconnect from the upper cylinder hose assembly.

11. While holding open hose end over a suitable container, press the UP button until cylinders are fully extended.

12. Reverse the hoses so that the spare fittings are on lower cylinder hose.

13. Be sure to keep reservoir filled with new oil.

14. While holding open hose end over a suitable container, press the DOWN button until cylinders are fully retracted.

15. Repeat steps 10 to 13 until oil coming from disconnected hose is clean. Then reconnect hose couplings to control box.

16. As these procedures are performed, additional oil may need to be added to the reservoir. Perform a final check of oil level with cylinders fully retracted.

6 TROUBLESHOOTING

The following chart is intended to assist with troubleshooting your hydraulic lift. While not all inclusive, the chart outlines the most common causes of a problem and the recommended course of action.

CAUTION:

IF THE PROBLEM WITH THE POWER SUPPLY IS NOT CERTAIN, ALWAYS FOLLOW THE MANUFACTURER'S WARRANTY POLICY BEFORE ANY OTHER REPAIR OR MAINTENANCE IS ATTEMPTED.

SYMPTOM	CAUSE AND CORRECTIVE ACTION
Hoses cannot be connected.	System is pressurized. Depressurize the hoses as follows: a. Depressurize the male fitting by carefully pressing the button on the end of the nipple or by briefly tapping the down switch. Use caution to avoid damaging the nipple button. b. Depressurize the female fitting by tapping the "up" switch briefly, which will depressurize the pump. If necessary, depressurize the female fitting on the hose by carefully pressing the internal button using a 3/8" bolt. Be careful not to damage the internal O-rings. Wrap the fitting with a rag while depressurizing to prevent spray. Keep the connectors clean.
Battery does not keep a charge.	Check the battery fluid levels, age, and time of last booster charge. The battery must be booster charged at the beginning and end of the season using a 10A charger. Verify solar panel or AC charger is plugged in correctly. Check the voltage output of the solar panel. Output should be about 14-18 volts when exposed to light. Verify that the polarity (positive or negative) of the solar panel matches the battery's polarity. Verify that the solar panel gets an adequate amount of light and the lift usage is within the monthly seasonal limits. The solar panel may be mounted up to 50 feet away from the battery if necessary. You may also order a bracket to mount the solar panel on top of the canopy. The remote control should only be drawing about 5 mA, and the pump 20 mA. The solar panel has an output of about 750 mA in direct sunshine.
Battery terminal becomes hot.	Verify cable is clean and tight on battery terminal
Remote control not functioning.	The remote control is designed to stop working if the battery drops below 11 volts to alert the user that the battery is getting low. If the lift operates with the up/down switch in the power supply, but not with the remote, charge the battery using a 10A booster charger.

Remote control range is limited.	Check battery in key chain transmitter. If the range is only limited while in your boat, try holding the transmitter over your head. Proximity to cell phone towers, power lines, and other electromagnetic interference can also reduce remote control range.
Fluid overflows reservoir.	It is normal to see some fluid overflow from the reservoir when the platform is cycled all the way down the first few times.
Lift stops after a split second.	Battery is low. If the battery is becoming low, the remote control will stop functioning at about 11 volts. The lift can still be operated using the up/down switch in the power supply, but the pump motor will stop and the green solenoid light will shut off if the voltage drops below 9 volts. Charge the battery using a 10A charger.
Power supply is operating properly, but platform raising is either difficult or impossible.	Platform is binding because frame is either not square or not set level in the water—refer to Chapter 3. Load exceeds rated capacity— reduce load weight as needed. User or dealer installed locking devices are in place—remove these. Auxiliary equipment such as boating hardware is being improperly hung on lift—remove this equipment permanently. Hoses to cylinders are leaking fluid in line, have a poor connection, or are kinked. Hydraulic system malfunctioning—contact your authorized service center.
Cylinders fail to hold the platform in a given position as described in the test procedure of Section 4.2	Check hose connections. Contact your authorized dealer—tampering with the hydraulic system can cause equipment damage that may invalidate your warranty.
Lift does not go down.	Turn the speed control knob counter clockwise. This valve only limits the downward speed of the lift. If that does not solve the problem, check that the black wire is connected to the left coil on the pump, and the yellow wire is on the right coil.
Lowest platform position is too high or low relative to the water.	Connections between the vertical and adjustable legs need readjusting as described in Chapter 3.
Boat is not lifting level—stern is lifting higher or lower than the bow.	Frame is not level in the water—relocate pin connections between the adjustable and vertical legs.
Boat shifts position when operating the lift.	Boat is not properly secured on the lift—failure to properly secure boat can cause equipment damage and/or serious personal injury.

7 PARTS LISTS

Each reference number or letter in the following parts lists can be matched with the reference number or letter referred to in both the text and illustrations of Chapter 3, Installation and Setup.

WARNING:

FAILURE TO APPLY A SUITABLE LUBRICANT TO THE MATING SURFACES OF STAINLESS STEEL THREADED FASTENERS MAY CAUSE GALLING AND/OR SEIZING OF ASSEMBLY.

7.1 HL9K BOAT LIFT

SECTION #	PART #	QTY	DESCRIPTION
7.3	4107125	1	HL9K BUNDLE 1 of 2
7.5	4107131	1	HL9K COMMON BUNDLE #2
7.7	4107101	1	HL ALUM BUNK BUNDLE
7.8	4107409	1	HL9K CYLINDER & HOSE ASSY PLATED (STANDARD)
	4107408		HL9K CYL W/STAINLESS HOSE & FTG'S (OPTIONAL)
7.9	4107210	1	HL9K HARDWARE CARTON OF PARTS
	4107419	1	HL CONTROL BOX—STANDARD

7.2 HL9KXL BOAT LIFT

SECTION #	PART #	QTY	DESCRIPTION
7.4	4107128	1	HL9KXL BUNDLE 1 of 2
7.5	4107131	1	HL9K COMMON BUNDLE #2
7.7	4107101	1	HL ALUM BUNK BUNDLE
7.8	4107409	1	HL9K CYLINDER & HOSE ASSY PLATED (STANDARD)
	4107---		HL9K CYL W/STAINLESS HOSE & FTG'S (OPTIONAL)
7.9	4107210	1	HL9K HARDWARE CARTON OF PARTS
	4107419	1	HL CONTROL BOX—STANDARD

7.3 HL9K BUNDLE 1 of 2 (48")

REF #	PART #	QTY	DESCRIPTION
8	4107582	1	HL9K LIFT ARM ASSEMBLY- REAR
9	4107428	1	HL9K LIFT ARM ASSEMBLY- FRONT
10	4107604	4	HL9K LIFTARM EXTENSION—48" LIFT HEIGHT

7.4 HL9KXL BUNDLE 1 of 2 (60")

REF #	PART #	QTY	DESCRIPTION
8	4107582	1	HL9K LIFT ARM ASSEMBLY- REAR
9	4107428	1	HL9K LIFT ARM ASSEMBLY- FRONT
10	4107601	4	HL9K LIFTARM EXTENSION—60" LIFT HEIGHT

7.5 HL9K COMMON BUNDLE #2

REF #	PART #	QTY	DESCRIPTION
3	4107588	2	HL9K LEG ASSEMBLY
4	4107591	1	HL9K MAIN FRAME ASSEMBLY LH
5	4107594	1	HL9K MAIN FRAME ASSEMBLY RH

7.6 HL EXTENSION LEGS

REF #	PART #	QTY	DESCRIPTION
2	as ordered	4	HL EXTENSION LEGS 3’ to 9’ LENGTHS (in 2’ increments)

7.7 HL BUNK BUNDLE

REF #	PART #	QTY	DESCRIPTION
12	4107410	2	HL BUNK ASSEMBLY (2pcs. Total)

7.8 4107409 HL9K HYDRAULIC CYLINDERS & FITTINGS PLATED (STANDARD)

REF #	PART #	QTY	DESCRIPTION
11	6041071	4	HYDRAULIC CYLINDER 3 X 15-7/8
S	4107925	4	HOSE ASSEMBLY 4’ W/PLTD FTG’S
T	4107922	4	HOSE ASSEMBLY 2’ W/PLTD FTG’S
U	4100020	2	HOSE ASSEMBLY 20’ W/PLTD FTG’S
V	5641010	4	3/8 X 1/4 ADAPTER
W	5641020	6	1/4 TEE
X	6000700	1	1/4 FEMALE COUPLING (SNAP TO CONNECT)
	6041364		1/4 FEMALE COUPLING (SCREW TO CONNECT)
Y	6000701	1	1/4 MALE COUPLING (SNAP TO CONNECT)
	6041365		1/4 MALE COUPLING (SCREW TO CONNECT)
ZZ	4107931	4	HOSE ASSEMBLY 4-1/2’ W/PLTD FTG’S
YY	5641073	4	3/8 X 1/4 90 DEGREE ADAPTER

4107408 HL9K HYDRAULIC CYLINDERS W/STAINLESS HOSE & FITTINGS (OPTIONAL)

REF #	PART #	QTY	DESCRIPTION
11	6041071	4	HYDRAULIC CYLINDER 3 X 15-7/8
S	4107955	4	HOSE ASSEMBLY 4’ W/STAINLESS FTG’S
T	4107952	4	HOSE ASSEMBLY 2’ W/STAINLESS FTG’S
U	4107964	2	HOSE ASSEMBLY 20’ W/STAINLESS FTG’S
V	5641010	4	3/8 X 1/4 ADAPTER
W	5694102	6	1/4 TEE-STAINLESS
X	6041364	1	1/4 FEMALE COUPLING (SCREW TO CONNECT)
Y	6041365	1	1/4 MALE COUPLING (SCREW TO CONNECT)
ZZ	4107958	4	HOSE ASSEMBLY 4-1/2’ W/STAINLESS FTG’S
YY	5694101	4	3/8 X 1/4 90 DEGREE ADAPTER STAINLESS

7.9 HL9K HARDWARE CARTON OF PARTS

REF #	PART #	QTY	DESCRIPTION
A	4100900	1	HL LEG PIN SET (4 ea. PINS & CLIPS)
1	4107537	4	FOOT PLATE ASSY
6	4107576	4	CYLINDER SUPPORT—RIGHT HAND
7	4107573	4	CYLINDER SUPPORT—LEFT HAND
Z	6436105	4	3” SQUARE PLASTIC CAP
	4107315	**1**	**HL9K BAG OF BOLTS consisting of:**
C	5897018	12	1/2 NYLOCK HEX NUT
D	5896292	12	1/2 X 4 HEX HEAD CAP SCREW
E	5896262	32	3/8 X 4-1/2 HEX HEAD CAP SCREW
F	5896406	56	3/8 SAE FLAT WASHER

G	5806243	56	3/8 SPLIT LOCK WASHER
H	5896377	56	3/8 HEX NUT
I	5896257	24	3/8 X 3-1/2 HEX HEAD CAP SCREW
	4107318	**1**	**HL9K CLEVIS PIN BAG consisting of:**
J	4107934	8	2-1/4” OD X .91” ID X 1/16” THICK NYLON LIFTARM WASHER
K	4107916	4	3/4 X 5-3/8 BUNK CLEVIS PIN
	5894109		HL CLEVIS PIN ¾” X 5” HEADED
L	4107919	4	7/8 X 7-1/16 CYLINDER BOTTOM CLEVIS PIN
M	4107913	4	7/8 X 4-1/8 CYLINDER TOP CLEVIS PIN
N	4107949	8	2” OD X 29/32” ID X 3/16” THICK HL CYL SPACER
O	4107937	8	1-3/4” OD X 25/32 ID X 1/8 THICK NYLON BUNK WASHER
P	5894108	24	5/32 X 1-3/4 COTTER PIN
Q	5893625	24	7/8 SAE FLAT WASHER
R	5896417	8	3/4 SAE FLAT WASHER
B	4107940	4	7/8 X 5-3/8 LIFTARM CLEVIS PIN
	5894110		HL CLEVIS PIN 7/8” X 5” HEADED

WARNING:

HYDRAULIC CYLINDER HOSE FITTINGS MUST FACE UPWARDS TO AVOID DAMAGING THE FITTINGS OR HOSES IF THEY CONTACT THE GROUND DURING OPERATION. DAMAGE TO BOAT OR LIFT FROM SUDDEN LOSS OF HYDRAULIC FLUID COULD RESULT.

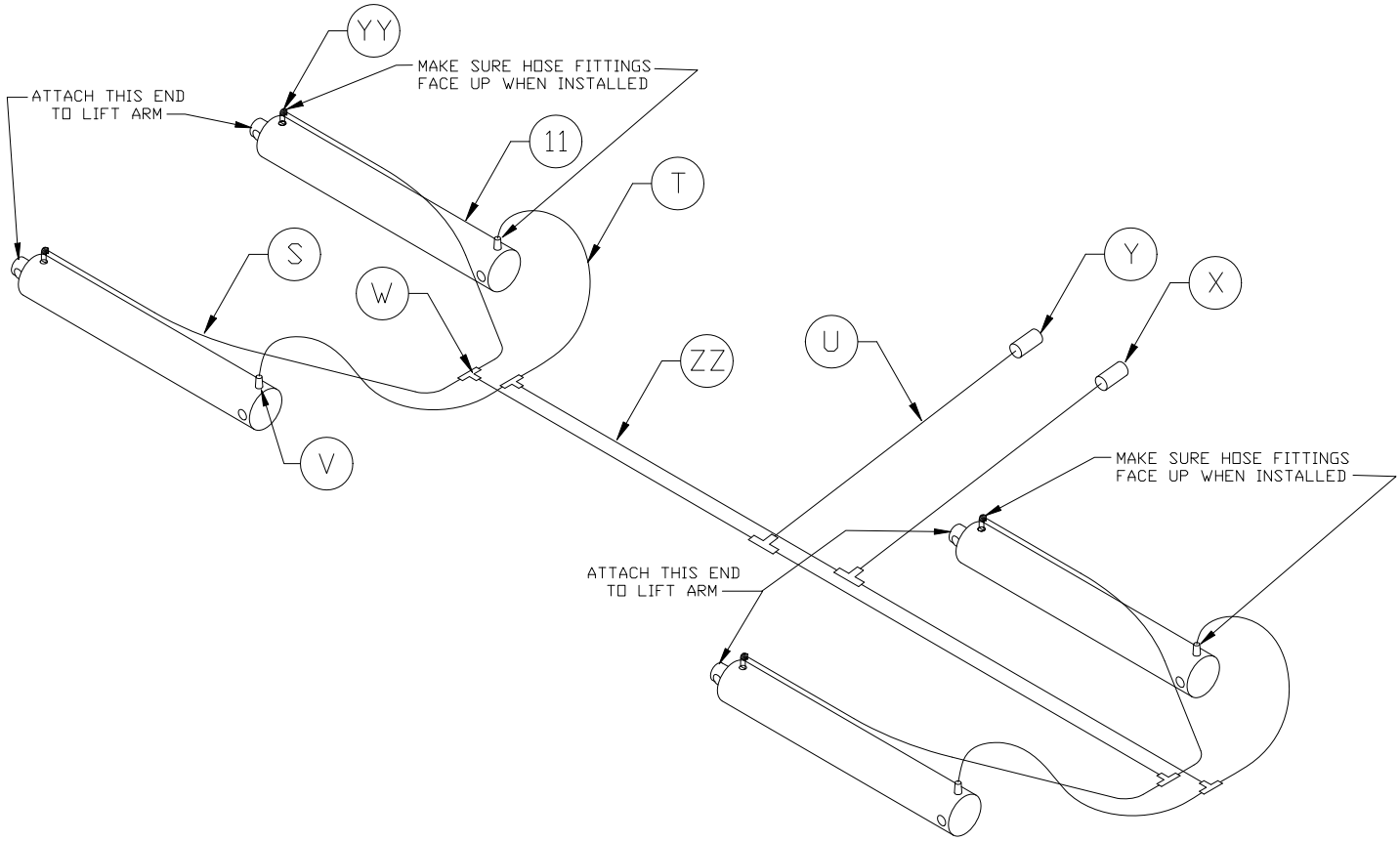

Figure 7-1
Hydraulic Cylinder and Hose Assembly

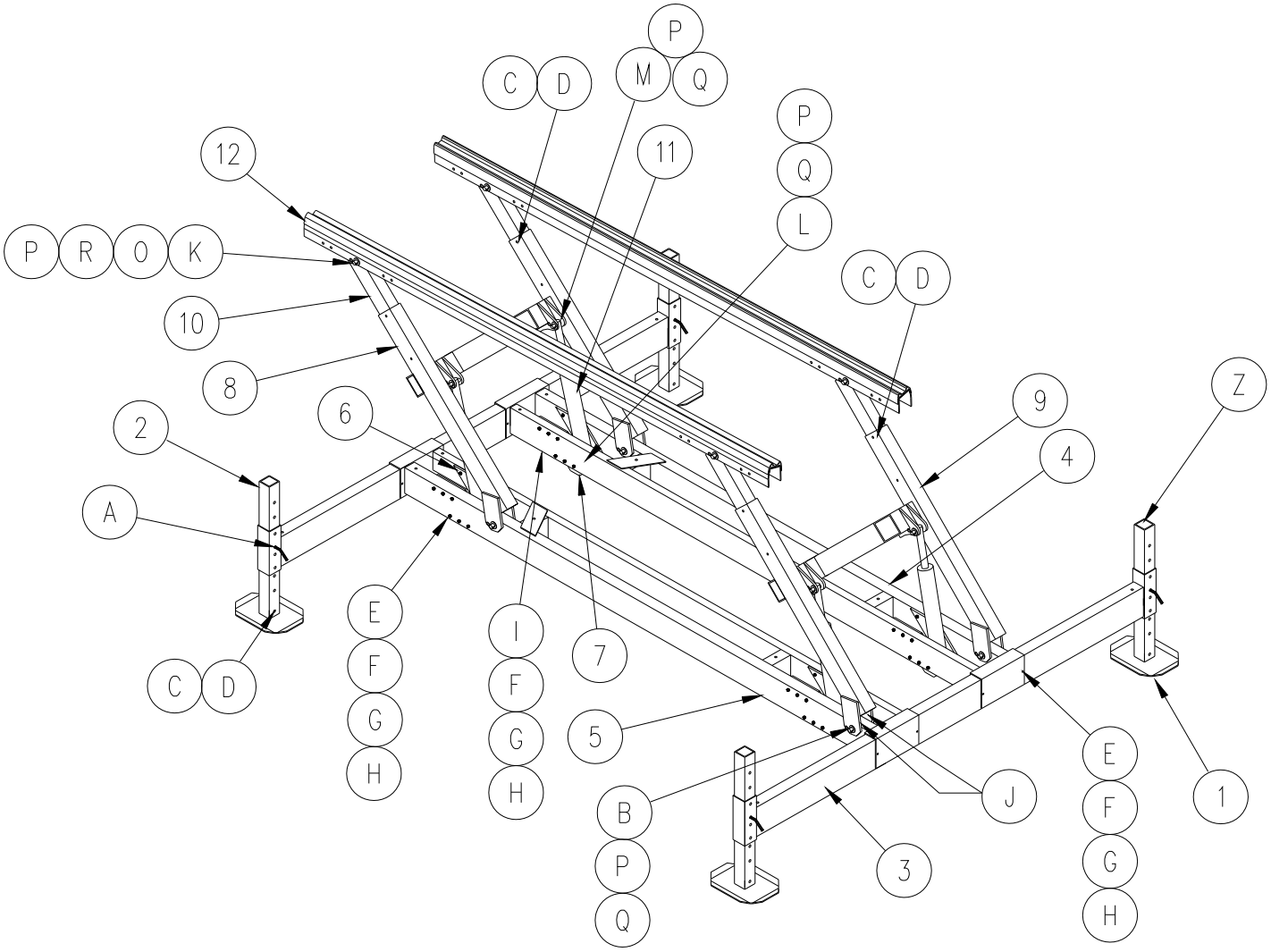

Figure 7-2
Complete Hydraulic Lift Assembly

LIMITED PRODUCT WARRANTY

Reimann & Georger Corporation
Marine Products

RGC Marine products, hereafter referred to as the "Manufacturer", extend this limited warranty to the original purchaser of this product. The original purchaser, hereinafter referred to as the "Buyer", is defined as the first legal owner of this product other than an authorized distributor or dealer who has bought the product from the Manufacturer for resale to the public. **The Buyer must complete and return the Warranty Registration section of the provided Warranty Card to make this limited warranty effective.**

CONSUMER PRODUCT PROVISIONS

I. ARTICLE I—CONSUMER PRODUCT PROVISIONS: THE FOLLOWING PROVISIONS SHALL BE APPLICABLE IF THIS PRODUCT IS BEING PURCHASED FOR PERSONAL, FAMILY OR HOUSEHOLD PURPOSES.

THE CONSUMER PRODUCT PROVISIONS CONTAINED IN THIS ARTICLE I SHALL APPLY UNLESS THIS PRODUCT IS BEING PURCHASED SOLELY FOR COMMERCIAL OR INDUSTRIAL USE, IN WHICH EVENT THE PROVISIONS CONTAINED IN ARTICLE II BELOW SHALL APPLY AND THE PROVISIONS CONTAINED IN THIS ARTICLE I SHALL BE INAPPLICABLE.

A. 1-YEAR LIMITED WARRANTY

The Manufacturer warrants to the Buyer that all supplied parts shall be free of defects in material and workmanship for a period of one (1) year from date of original purchase. This limited warranty covers the cost of all parts and labor needed to repair any item that is found to be defective in material and workmanship. Items covered include hydraulic unit, cylinders, hoses, bearings and remote control.

B. 15-YEAR LIMITED WARRANTY ON HL SERIES ALUMINUM FRAME EXTRUSION

The Manufacturer warrants to the Buyer that the frame and extrusions shall be free of defects in material and workmanship for a period of fifteen (15) years from date of original purchase. This limited warranty covers the cost of all parts and labor needed to repair any item that is found to be defective in material and workmanship.

C. MANUFACTURER'S OBLIGATIONS

The Manufacturer's sole obligation under either of these limited warranties is the replacement or repair, at the Manufacturer's discretion, of parts found to be defective.

D. NO SPECIAL, INCIDENTAL OR CONSEQUENTIAL DAMAGES

IN NO EVENT SHALL THE MANUFACTURER BE LIABLE TO THE BUYER OR ANY PERSON FOR ANY INDIRECT, SPECIAL, INCIDENTAL, OR CONSEQUENTIAL LOSSES OR DAMAGES CONNECTED WITH THE USE OF THE PRODUCT UNDER WARRANTY. SUCH DAMAGES FOR WHICH THE MANUFACTURER SHALL NOT BE RESPONSIBLE INCLUDE, BUT ARE NOT LIMITED TO, LOST TIME AND CONVENIENCE, LOSS OF USE OF THE PRODUCT, THE COST OF A PRODUCT RENTAL, COSTS OF GASOLINE, TELEPHONE, TRAVEL, OR LODGING, THE LOSS OF PERSONAL OR COMMERCIAL PROPERTY, AND THE LOSS OF REVENUE.

Some States do not allow the exclusion or limitation of incidental or consequential damages, so the above limitation or exclusion may not apply to you.

E. NO LIABILITY IN EXCESS OF PURCHASE PRICE

IN NO EVENT SHALL THE MANUFACTURER'S OBLIGATIONS UNDER THIS LIMITED WARRANTY EXCEED THE PURCHASE PRICE OF THE PRODUCT.

F. NO EXTENSION OF STATUTE OF LIMITATIONS

ANY REPAIRS PERFORMED UNDER EITHER OF THESE WARRANTIES SHALL NOT IN ANY WAY EXTEND THE ONE-YEAR AND FIFTEEN-YEAR STATUTES OF LIMITATIONS CONTAINED IN THIS LIMITED WARRANTY.

G. PROCEDURE FOR WARRANTY PERFORMANCE

If the product fails to perform to the Manufacturer's specifications, the Buyer must contact the dealer from whom the product was purchased. The Buyer must provide the dealer with the applicable model and serial numbers, the date of purchase, and the nature of the problem.

H. PREAPPROVAL OF LABOR COSTS

All labor costs related to a dealer's performance of the warranty obligations under this limited warranty must be pre-approved by Reimann & Georger Corp. Marine Products.

I. NO OTHER EXPRESS WARRANTIES

THE MANUFACTURER IS NOT SUBJECT TO ANY EXPRESS WARRANTIES OTHER THAN THOSE SET FORTH ABOVE.

J. LIMIT ON DURATION OF IMPLIED WARRANTIES

THE DURATION OF ANY IMPLIED WARRANTIES UNDER APPLICABLE STATE LAW RELATING TO THE PURCHASE OF THIS PRODUCT SHALL BE LIMITED TO A PERIOD OF ONE (1) YEAR FROM THE DATE OF PURCHASE.

Some States do not allow limitations on how long an implied warranty lasts, so the above limitations may not apply to you.

K. QUESTIONS REGARDING LIMITED WARRANTY

Any questions regarding this limited warranty or the procedure which the consumer should follow in order to obtain performance of any warranty obligation may be addressed to either the dealer from whom this product is purchased or to Reimann & Georger Corp. Marine Products, P.O. Box 681, Buffalo, NY 14240.

L. EXCLUSIONS FROM LIMITED WARRANTY. THIS LIMITED WARRANTY DOES NOT COVER ANY OF THE FOLLOWING:

1. Equipment which has been abused, damaged, used beyond rated capacity, or which is damaged or has defects caused by repairs or service completed by persons other than authorized service personnel.

2. Costs of repairing damage caused by environmental factors which include, but are not limited to, airborne fallout, chemicals, tree sap, salt, ocean spray, and water hazards.

3. Damage caused by acts of God which include, but are not limited to, hailstorms, windstorms, tornadoes, sandstorms, lightning, floods, and earthquakes.

4. Damage under conditions caused by fire or accident, by abuse or negligence, by improper installation, by misuse, by incorrect operation, by "normal wear and tear", by improper adjustment or alteration, by alterations not done by the Manufacturer, or by failure of product parts from such alterations.

5. Costs of repairing damage caused by poor or improper maintenance, costs of normally scheduled maintenance, or the cost of replacing any parts unless done as the result of a repair covered by your one-year limited warranty.

6. Costs of modifying the product in any way once delivered to the Buyer, even if such modifications were added as a production change on other products made after the Buyer's product was built.

M. RIGHT TO MODIFY PRODUCT

The Manufacturer has the right to modify this product at any time without incurring any obligation to make the same or similar modifications on products previously purchased.

N. NO AUTHORITY TO ALTER WARRANTY

No agent, representative, distributor or dealer has any authority to alter the terms of this warranty in any way.

O. SPECIFIC LEGAL RIGHTS

This warranty gives you specific legal rights and you may also have other rights, which vary, from State to State.

COMMERCIAL PRODUCT PROVISIONS

II. ARTICLE II—COMMERCIAL PRODUCT PROVISIONS: THE FOLLOWING PROVISIONS SHALL BE APPLICABLE ONLY IF THIS PRODUCT IS BEING PURCHASED SOLELY FOR COMMERCIAL OR INDUSTRIAL USE. IF THIS PRODUCT IS BEING PURCHASED FOR PERSONAL, FAMILY OR HOUSEHOLD PURPOSES, THE PROVISIONS CONTAINED IN THIS ARTICLE II SHALL NOT BE APPLICABLE AND THE PROVISIONS CONTAINED IN ARTICLE I ABOVE SHALL APPLY.

A. 1-YEAR LIMITED WARRANTY

The Manufacturer warrants to the Buyer that all supplied parts shall be free of defects in material and workmanship for a period of one (1) year from date of original purchase. This limited warranty covers the cost of all parts and labor needed to repair any item that is found to be defective in material and workmanship. Items covered include hydraulic unit, cylinders, hoses, bearings and remote control.

B. 5-YEAR LIMITED WARRANTY ON HL SERIES ALUMINUM FRAME EXTRUSION

The Manufacturer warrants to the Buyer that the frame and extrusions shall be free of defects in material and workmanship for a period of five (5) years from date of original purchase. This limited warranty covers the cost of all parts and labor needed to repair any item that is found to be defective in material and workmanship.

C. MANUFACTURER'S OBLIGATIONS

The Manufacturer's sole obligation under either of these limited warranties is the replacement or repair, at the Manufacturer's discretion, of parts found to be defective.

D. NO SPECIAL, INCIDENTAL, OR CONSEQUENTIAL DAMAGES

IN NO EVENT SHALL THE MANUFACTURER BE LIABLE TO THE BUYER OR ANY PERSON FOR ANY INDIRECT, SPECIAL, INCIDENTAL, OR CONSEQUENTIAL LOSSES OR DAMAGES CONNECTED WITH THE USE OF THE PRODUCT UNDER WARRANTY. SUCH DAMAGES FOR WHICH THE MANUFACTURER SHALL NOT BE RESPONSIBLE INCLUDE, BUT ARE NOT LIMITED TO, LOST TIME AND CONVENIENCE, LOSS OF USE OF THE PRODUCT, THE COST OF A PRODUCT RENTAL, COSTS OF GASOLINE, TELEPHONE, TRAVEL, OR LODGING, THE LOSS OF PERSONAL OR COMMERCIAL PROPERTY, AND THE LOSS OF REVENUE.

E. NO LIABILITY IN EXCESS OF PURCHASE PRICE

IN NO EVENT SHALL THE MANUFACTURER'S OBLIGATIONS UNDER THIS LIMITED WARRANTY EXCEED THE PURCHASE PRICE OF THE PRODUCT.

F. NO EXTENSION OF STATUTE OF LIMITATIONS

ANY REPAIRS PERFORMED UNDER EITHER OF THESE WARRANTIES SHALL NOT IN ANY WAY EXTEND THE RESPECTIVE STATUTES OF LIMITATIONS CONTAINED IN THIS LIMITED WARRANTY.

G. WAIVER OF OTHER WARRANTIES

THESE EXPRESS WARRANTIES ARE IN LIEU OF AND EXCLUDE ANY AND ALL OTHER WARRANTIES, EXPRESS OR IMPLIED, INCLUDING, BUT NOT LIMITED TO, THE IMPLIED WARRANTIES OR MERCHANTABILITY AND FITNESS FOR A PARTICULAR PURPOSE.

H. PROCEDURE FOR WARRANTY PERFORMANCE

If the product fails to perform to the Manufacturer's specifications, the Buyer must contact the dealer from whom the product was purchased. The Buyer must provide the dealer with the applicable model and serial numbers, the date of purchase, and the nature of the problem.

I. PREAPPROVAL OF LABOR COSTS

All labor costs related to a dealer's performance of the warranty obligations under this limited warranty must be pre-approved by Reimann & Georger Corp. Marine Products.

J. EXCLUSIONS FROM WARRANTY. THIS LIMITED WARRANTY DOES NOT COVER ANY OF THE FOLLOWING:

1. Equipment which has been abused, damaged, used beyond rated capacity, or which is damaged or has defects caused by repairs or service completed by persons other than authorized service personnel.

2. Costs of repairing damage caused by environmental factors which include, but are not limited to, airborne fallout, chemicals, tree sap, salt, ocean spray, and water hazards.

3. Damage caused by acts of God which include, but are not limited to, hailstorms, windstorms, tornadoes, sandstorms, lightning, floods, and earthquakes.

4. Damage under conditions caused by fire or accident, by abuse or negligence, by improper installation, by misuse, by incorrect operation, by "normal wear and tear", by improper adjustment or alteration, by alterations not done by the Manufacturer, or by failure of product parts from such alterations.

5. Costs of repairing damage caused by poor or improper maintenance, costs of normally scheduled maintenance, or the cost of replacing any parts unless done as the result of a repair covered by your one-year limited warranty.

6. Costs of modifying the product in any way once delivered to the Buyer, even if such modifications were added as a production change on other products made after the Buyer's product was built.

K. RIGHT TO MODIFY PRODUCT

The Manufacturer has the right to modify this product at any time without incurring any obligation to make the same or similar modifications on products previously purchased.

L. NO AUTHORITY TO ALTER WARRANTY

No agent, representative, distributor, or dealer has any authority to alter the terms of this warranty in any way.

M. SPECIFIC LEGAL RIGHTS

This warranty gives you specific legal rights, and you may also have other rights, which vary, from State to State.